Spherical roller bearings, cylindrical and tapered bore

Principal dimensions			Basic load ratings		Speed ratings		Designation
			dynamic	static	Reference speed	Limiting speed	
d	D	B	C	C0			* SKF Explorer bearing
mm			kN		r/min		-
110	200	53	572	640	3000	4000	22222 E *

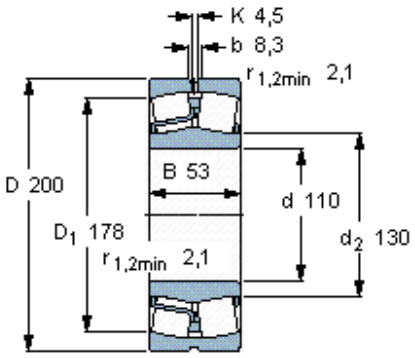

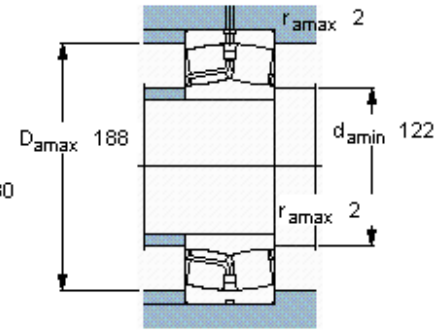

Calculation factors

e 0,25
Y_1 2,7
Y_2 4
Y_0 2,5